REV	DESCRIPTION	MARK
X1	first edition	

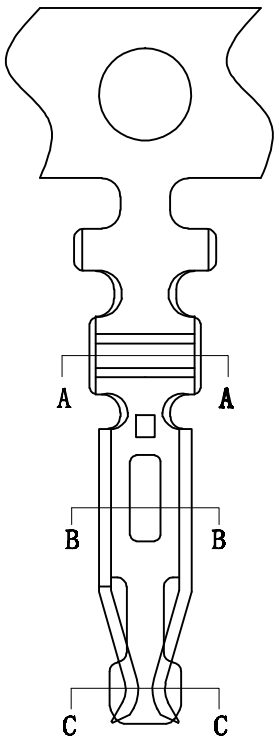

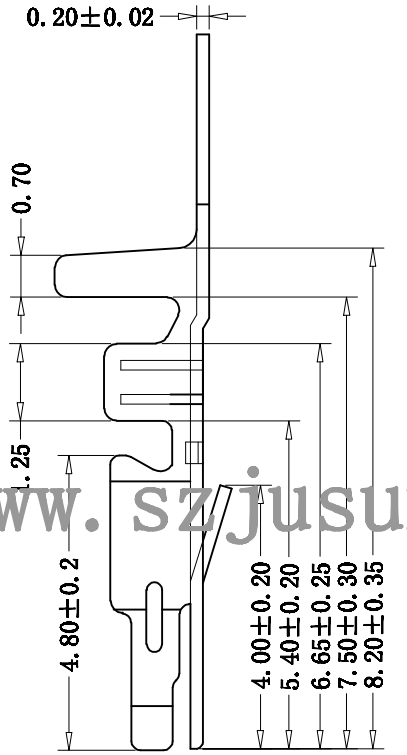

www.szjusun.cn

■ SPECIFICATIONS

- Voltage rating: 1400V AC,DC
- Current rating: 1A,AC,DC(AWG#24)
- Withstanding Voltage:3800V AC/minute
- Insulation resistance:1000MΩmin
- Temperature range:-25℃ - +85℃
- Contact resistance:20mΩ

■ WAFER

- Thickness:0.20mm
- Material:Phosphor.Bronze,Tin Plated.
- Wire Range:AWG#24-#28
- Reel Q'ty:10,000 pcs/reel

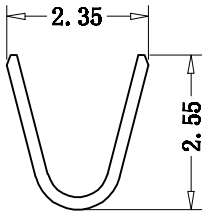

A-A

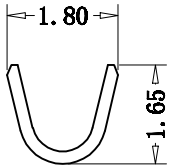

B-B

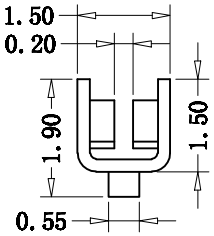

C-C

JUSUN 钜赛实业(深圳)有限公司 JUSAI INDUSTRIAL (SHENZHEN) CO.,LTD				TITLE: BHS3.5-TER
X. ±	X° ±	MAT'L	USE:	PART NO.:
.X ±0.1	.X° ±		APPD:	
.XX ±0.05	.XX° ±	FINISH	CHKD:	DWG NO.:
.XXX ±	.XXX° ±			SCALE 1:1 / SHEET 1/1 / REV. X1
	UNITS: mm	Q'TY	DR:	